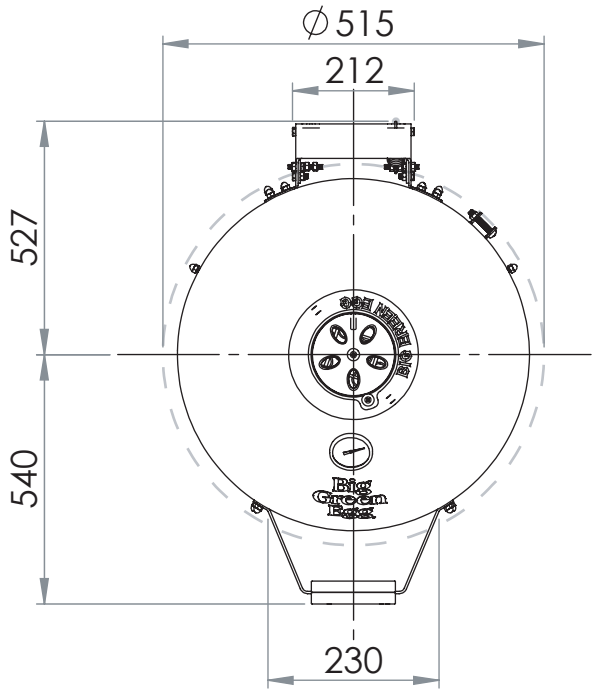

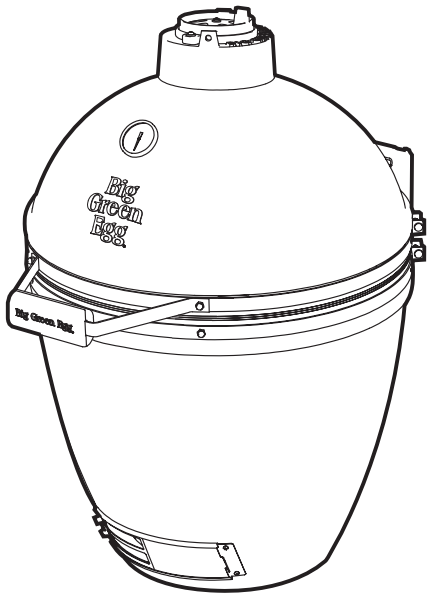

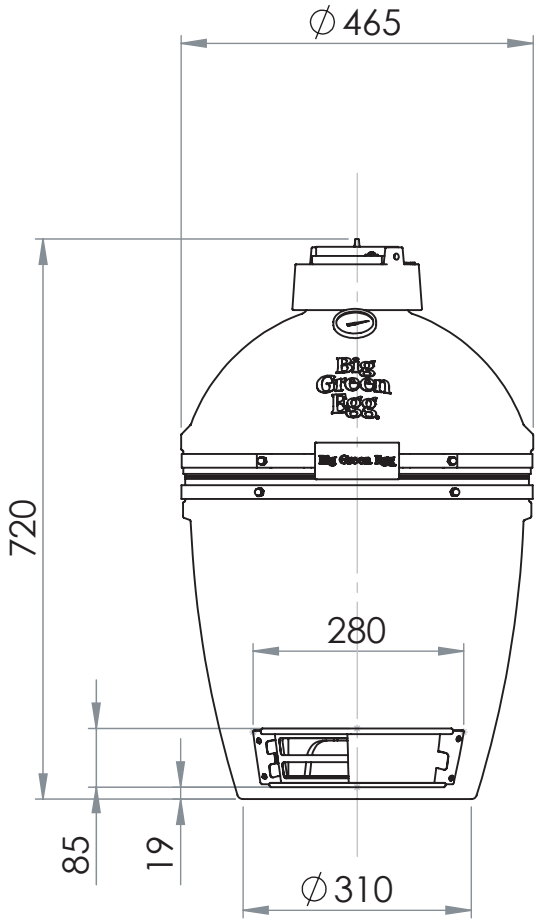

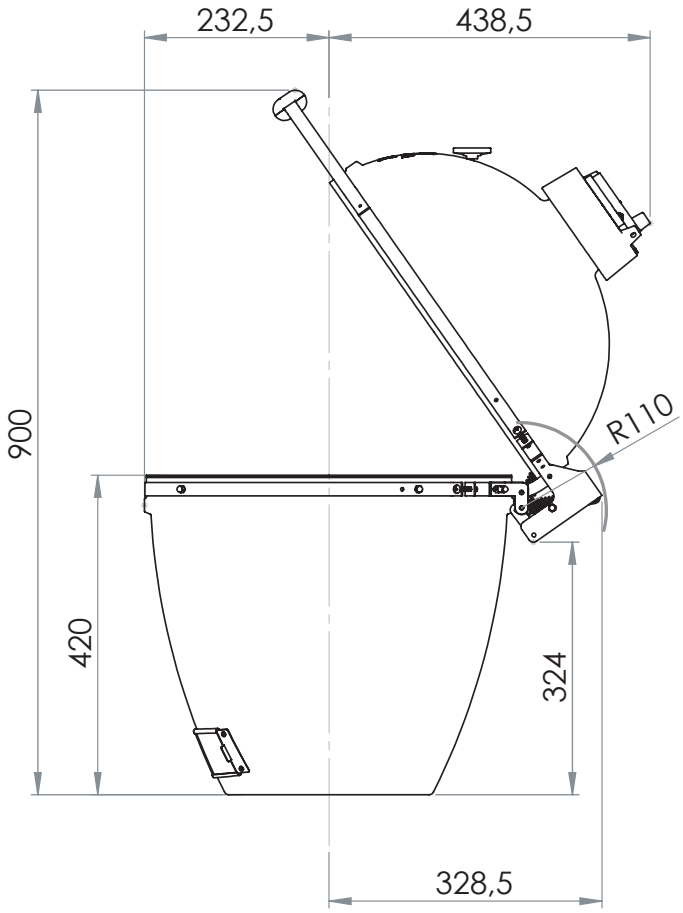

M

mm

45 kg

Big Green Egg
The Ultimate Cooking Experience™