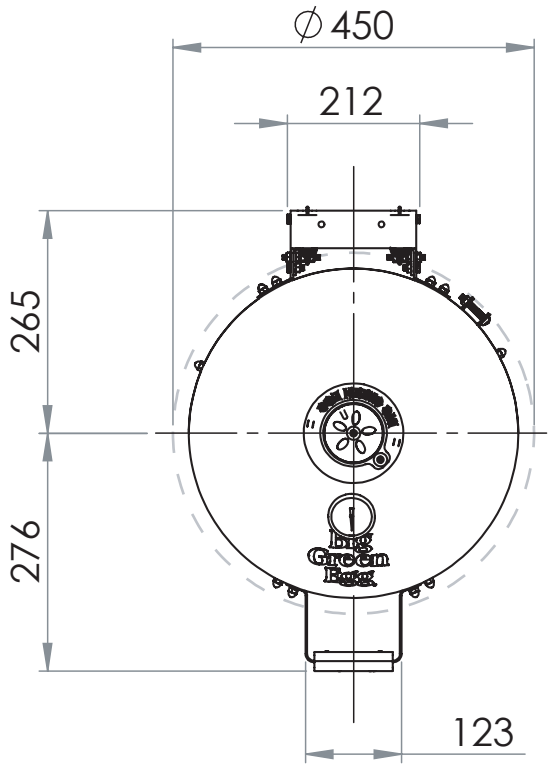

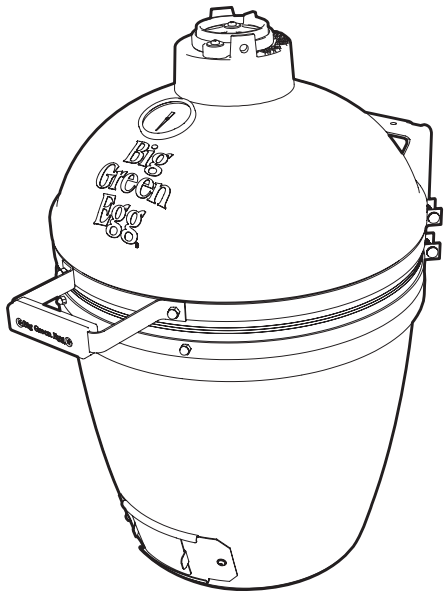

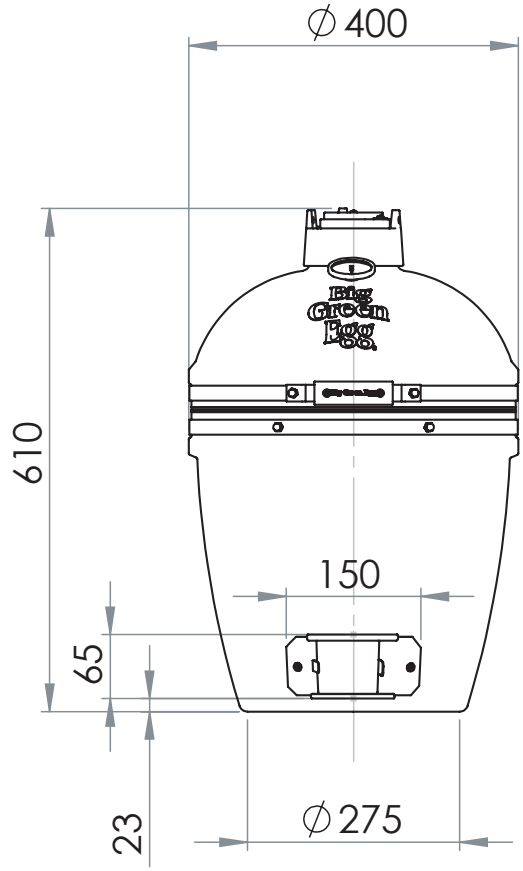

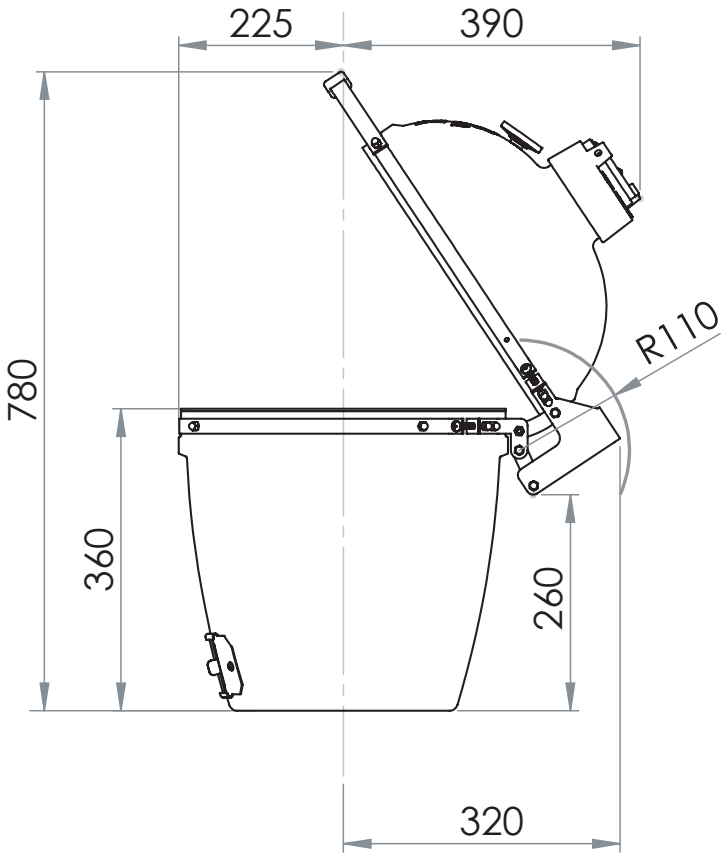

S

mm

35 kg

Big Green Egg
The Ultimate Cooking Experience™